International Journal of Smart Grid and Clean Energy

Simulation and detectability analysis of power system open phase condition in Korea's standard nuclear power plant

Soonhyun Hwang[a], Balho H. Kim[a]*, Sanghoun Joung[b], Hongseok Jang[b]

[a]*Power Economics Lab, Hongik University, Seoul, Republic of Korea*
[b]*Control & Electrical System, Korea Institute of Nuclear Safety (KINS), Daejeon, Republic of Korea*

Abstract

An open phase condition (OPC) is defined where power in one (or two) of the three phases of an off-site power source feed is lost for a long duration. Currently, OPC on nuclear power system has been reported from various countries of the world, however, the design vulnerability on power system that the existing protection relay in the power plant cannot detect the fault has been come to the front. Therefore, it is necessary to analyze the design vulnerability of power system for OPC in Korean nuclear power plants having similar power system structure with overseas power plants. In this paper, the occurrence of OPC in a power plant that supplies power to the on-site through SUT among domestic standard nuclear power plants is simulated by ETAP and analyzed the detectability of OPC event by current protection relay. The results of this study can be used as technical background data to improve the protection system of power plants and establish related regulations.

Keywords: Open Phase Condition (OPC), Fault Detection, Protection, ETAP

1. Introduction

An open phase condition (OPC) is defined where power in one (or two) of the three phases of an off-site power source feed is lost for a long duration. Unbalanced power supply to the load facility in the event of a fault can cause the plant to be shut down due to equipment failure or facility breakdown. [1] Currently, OPC on nuclear power system has been reported from various countries of the world. [2] Accordingly, NRC and other nuclear regulatory agencies require to establish a protection system of the power system that can automatically detect the OPC in all electrical configuration and operation modes and transmits an alarm to the main control room. [1] [3] [4]

In our previous research, our research team analyzed the overseas cases and causes of OPC [5] and analyzed the protection possibility through the current protection relay when OPC occurred in domestic standard nuclear power plants. [6] Domestic standard nuclear power plants have two kinds of system configurations, and in this paper, they are classified into types 'A' and 'B', respectively. Type A, which has been analyzed in the previous research, supplies power to on-site power system through Unit Auxiliary Transformer (UAT) or Stand-by Auxiliary Transformer (SAT). Type B, on the other hand, supplies power through UAT and Start-Up Transformers (SUT) simultaneously during normal operation.

In this paper, the occurrence of OPC in the type B nuclear power plant of Korea is simulated by ETAP and analyzed the detectability of OPC event by current protection relay.

2. OPC Simulation

In this paper, based on the operation status of the domestic standard nuclear power plant type B, the on/off-site power system of the target power plant is modeled and simulated the occurrence of OPC in

* Manuscript received May 9, 2019; revised January 3, 2020.
Corresponding author. Tel.: +82-2-333-9513; *E-mail address*: bhkim@wow.hongik.ac.kr
doi: 10.12720/sgce.9.2.282-289

each scenario using a power system analysis program, ETAP. And based on the results, the detectability is analyzed by comparing the change of voltage and current due to occurrence of OPC with the setting value of the protection relay installed in the on-site power system. ETAP is the general-purpose software for analyzing power systems such as power flow calculation, fault calculation, harmonics, optimal power flow calculation, stability analysis and protection cooperation, and is a proven program used in domestic nuclear power plants including US nuclear power plants. [7]

2.1. Operation status of target nuclear power plant

2.1.1. On / off-site power system configuration

The off-site power system of the target nuclear power plant consists of 345kV switchyard. The on-site power system is classified into AC power system, DC power system, and measurement and control power system. The AC power system consists of a main generator (MG), a main transformer (MT), two unit auxiliary transformers (UAT), two Start-Up Transformers (SUT), two Class-1E emergency diesel generators and alternate AC power source. The high-voltage power system consists of four Non-1E 13.8kV buses, four Non-1E 4.16kV buses, and two Class-1E 4.16kV buses. Two Class-1E 4.16 kV buses are connected to each Class-1E emergency diesel generator and alternate AC power is connected to the 4.16 kV bus line of Class-1E.

2.1.2. Operation of on-site power system

During normal operation of the power plant, the Non-1E load is supplied by MG through the UAT and the Class-1E load is supplied by 345kV switchyard through the SUT. If the power system is unable to supply power due to a fault in the off-site power system, auxiliary AC power is automatically supplied from multiple emergency diesel generators to shut down the plant safely.

2.2. Designing OPC simulation scenarios

2.2.1. Location of Faults

Type B power plant is required to analyze both the case of supplying through the UAT and SUT since it supplies power to the on-site load through UAT and SUT depending on the operating state. In addition, through the overseas case, it can be confirmed that the off-site power connection part is vulnerable to failure, and in this paper, the location of the accident was selected as follows.

- Off-site power connection line with high voltage side of MT
- Off-site power connection line with high voltage side of SUT

2.2.2. Types of faults

1-phase fault (with/without ground fault) and 2-phase fault may occur due to breakdown of insulation support of switchyard line and bus and circuit breaker failure. Therefore, three cases were selected as follows.

- 1-phase open (without ground fault)
- 2-phase open (without ground fault)
- 1-phase open (with high-impedance ground fault)

2.2.3. Target nuclear power plant operation mode

The influence of the accident varies depending on the size of the on-site load (transformer load ratio) when OPC occurs. Therefore, the operation modes of the power plant were set as shown in Table 1 according to the transformer load ratio (heavy load, light load, no load).

Table 1. The operation modes of target power plant for OPC simulation.

Load ratio	Operation mode	System condition
Heavy load	Normal operation	Non-1E loads receive power from MG through UAT and class-1E loads receive from the switchyard through SUT. MG supplies power to the power system network through MT.
	Hot-standby	Power from the switchyard is supplied to the on-site load through SUT. MT is stopped and UAT is opened.

	Start-up operation	Power from the switchyard is supplied to the on-site load through SUT. MT is stopped and UAT is opened.
Light load	Minimum loading	Power from the switchyard is supplied to the on-site load through SUT. MT is stopped and UAT is opened.
No load	Start-up operation	Power from the switchyard is supplied to the on-site load through SUT. When MT connected to power system network with minimum output, open phase fault on MT high voltage side is assumed to take place at no load.

2.2.4. OPC simulation scenario

The detailed simulation scenarios selected based on the failure type and the operation mode of the power plant are shown in Table 2.

Table 2. Detailed scenarios of OPC simulation.

Case No.	Operating mode	Power source	Fault location	Transformer loading	Type of fault
1	Normal operation	MG, UAT, SUT	MT	Heavy loaded	A' phase open
2	Normal operation	MG, UAT, SUT	MT	Heavy loaded	A, B' phase open
3	Normal operation	MG, UAT, SUT	MT	Heavy loaded	A' phase (with high-impedance ground fault)
4	Normal operation	MG, UAT, SUT	SUT	Heavy loaded	A' phase open
5	Normal operation	MG, UAT, SUT	SUT	Heavy loaded	A, B' phase open
6	Normal operation	MG, UAT, SUT	SUT	Heavy loaded	A' phase (with high-impedance ground fault)
7	Hot-standby	SUT	SUT	Heavy loaded	A' phase open
8	Hot-standby	SUT	SUT	Heavy loaded	A, B' phase open
9	Hot-standby	SUT	SUT	Heavy loaded	A' phase (with high-impedance ground fault)
10	Start-up operation	SUT	SUT	Heavy loaded	A' phase open
11	Start-up operation	SUT	SUT	Heavy loaded	A, B' phase open
12	Start-up operation	SUT	SUT	Heavy loaded	A' phase (with high-impedance ground fault)
13	Minimum loading	SUT	SUT	Light load	A' phase open
14	Minimum loading	SUT	SUT	Light load	A, B' phase open
15	Minimum loading	SUT	SUT	Light load	A' phase (with high-impedance ground fault)
16	Start-up operation	SUT	MT	No load	A' phase open
17	Start-up operation	SUT	MT	No load	A, B' phase open
18	Start-up operation	SUT	MT	No load	A' phase (with high-impedance ground fault)

2.3. OPC simulation

2.3.1. ETAP modeling of on/off-site power system of the target power plant

Fig. 1 is a model of on/off-site power system for performing ETAP simulation based on the power system configuration of the target power plant. The components are as follows.

- Off-site power system consists of 345kV switchyard (①)
- The main power system consists of MT (②), MG (③), two UAT (④) and two SUT (⑤)
- On-site power system consists of four Non-1E 13.8kV buses (⑥), four Class-1E 4.16kV buses (⑦) and two Class-1E 4.16kV buses (⑧)
- Two Class-1E 4.16 kV buses are connected to each emergency diesel generator (⑨)

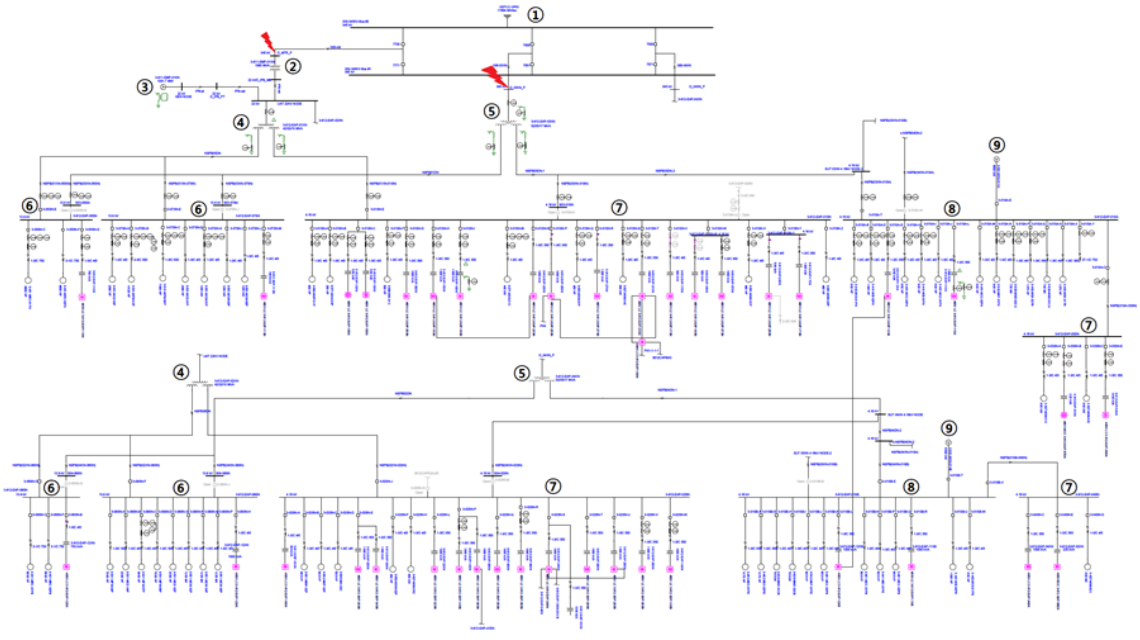

Fig. 1. ETAP modeling of on/off-site power system of the target power plant.

2.3.2. Implementation of ETAP simulation scheme

Model the on/off-site power system using ETAP to meet condition (power supply transformer, transformer load ratio, etc.) of each scenario. Then adjust the tap of the transformer to set the initial condition so that the voltage of each Class-1E and Non-1E bus line meets the standard value during normal operation. After setting the initial conditions, simulate the fault of each scenario.

2.4. Simulation Result

The simulation results for each case through the above-mentioned implementation scheme are shown in Table 3.

Table 3. The results of ETAP simulations.

Case No.	Non-1E 13.8kV bus voltage (%)				Non-1E 4.16kV bus voltage (%)				Class-1E 4.16kV bus voltage (%)				Transformer primary side neutral current (A)		MG / Bus motor negative sequence current (A)	
	Vab	Vbc	Vca	V_2	Vab	Vbc	Vca	V_2	Vab	Vbc	Vca	V_2	MT	SUT	MG	Bus motor
1	118	154	90	39	117	155	86	42	82	164	93	65	10281	112	43570	0
2	137	155	128	16	134	153	124	17	82	164	93	65	3765	97	18113	0
3	118	154	90	39	116	155	87	42	82	164	93	65	10233	112	43502	0
4	100	100	100	0	98	98	98	0	95	99	99	3	6	21	2	0
5	100	100	100	0	98	98	98	0	0	65	65	37	16	56	33	1
6	100	100	100	0	98	98	98	0	58	94	79	21	34	178	18	0
7	82	98	97	11	80	94	94	9	80	93	93	8	0	87	0	186
8	0	48	48	28	1	39	39	23	0	38	38	22	0	243	0	488
9	55	95	82	23	54	87	77	19	54	86	77	18	0	190	0	406
10	81	98	97	11	79	93	93	9	79	92	92	9	0	90	0	194
11	0	48	48	27	1	38	39	22	1	37	38	22	0	244	0	487
12	55	95	81	23	52	85	76	19	52	84	76	18	0	192	0	412
13	99	100	100	1	99	100	100	0	99	100	100	0	0	4	0	9
14	0	48	48	27	0	41	41	24	0	40	40	23	0	227	0	485
15	69	97	87	16	71	95	86	14	71	95	86	14	0	133	0	290

16	83	168	94	68	77	152	91	55	77	150	90	53	9950	112	43461	1197
17	83	168	94	68	77	152	91	55	77	150	90	54	1335	92	6974	1201
18	83	168	94	68	77	152	91	55	77	150	90	53	9905	111	43555	1197

3. Analysis of OPC Detectability of Protection Relay

3.1. Specification of protection relay

When OPC occurs on the high voltage side of the transformer, voltage unbalance occurs in the on-site power system, and negative sequence voltage and negative sequence current exist in the power system. Also, a conductor that is disconnected due to an accident will cause voltage loss due to power failure and will also generate a zero sequence current if the disconnected conductor causes a ground fault.

When OPC occurs, protection relays that can operate among the existing designed protection relay systems at the target power plants of this paper can be expected as shown in Table 4.

Table 4. Types of relays and protection measures.

Protective equipment	Relay type (num.)	Functions
MG	Negative sequence overcurrent relay (346)	Tripping the switchyard power circuit breakers
MT	Neutral overcurrent relay (551GN)	Alarm in the MCR
SUT	Neutral overcurrent relay (551GNA)	Alarm in the MCR
Non-Class 1E Buses (13.8kV)	Under voltage relay (227M)	Load shedding
Non-Class 1E Buses (4.16kV)	Under voltage relay (127M/T)	Load shedding
Class 1E Buses	Under voltage relay (127) Degraded voltage relay (127C)	Starting EDG Trip incoming breaker Initiation of Load shedding and sequential loading
Non-Class 1E and Class 1E Buses	Negative sequence overvoltage relay (247, 147)	Alarm in the MCR
Non-Class 1E 13.8kV motors	Negative sequence overcurrent relay (246)	Tripp MV motors

3.2. OPC detectability analysis result

Based on the above simulation results, the OPC detectability was analyzed by comparing with the characteristics of the corresponding protection relay. The final analysis results for each case are shown in Table 5.

Table 5. Detectability analysis results for each case.

Case No.	Relay type					
	46	51GN	27M, M/T	27	27C	47
Case 1	O	O	X	X	O	O
Case 2	O	O	X	X	O	O
Case 3	O	O	X	X	O	O
Case 4	X	X	X	X	X	X
Case 5	X	O	O	O	O	O
Case 6	X	O	O	O	O	O
Case 7	O	O	X	X	O	O
Case 8	O	O	O	O	O	O
Case 9	O	O	O	O	O	O

Case 10	O	O	X	X	O	O
Case 11	O	O	O	O	O	O
Case 12	O	O	O	O	O	O
Case 13	X	X	X	X	X	X
Case 14	O	O	O	O	O	O
Case 15	O	O	O	X	O	O
Case 16	O	O	X	X	O	O
Case 17	O	O	X	X	O	O
Case 18	O	O	X	X	O	O

3.3. Evaluation of analysis results

3.3.1. Case 1, 2, 3

Negative sequence overcurrent relay (346) of the main generator was activated and tripped the switchyard breaker. MT and SUT high voltage side neutral overcurrent relay (551GN) was operated and alerted to the main control room. The Class-1E bus under voltage relay (127C) was activated and started the EDG and tripped the incomming breaker of the Class-1E high voltage circuit breaker panel. The negative sequence overvoltage relay (47) of all the buses was activated and alerted to the main control room. The 13.8kV Non-1E negative sequence overcurrent relay (246) was operated and shut off the high-voltage motor load of the Non-1E bus.

3.3.2. Case 4

During normal operation, there is no protection relay that can detect 2-phase open fault on SUT high voltage side.

3.3.3. Case 5, 6

SUT high voltage side neutral overcurrent relay (551GN) was operated and alerted to the main control room. 4.16 kV Non-1E bus undervoltage relay (127M / T) was operated and shut off the 4.16 kV Non-1E bus load. Class-1E bus degraded voltage relay (127, C) was operated and started the and tripped the incomming breaker of the Class-1E high voltage circuit breaker panel. The negative sequence overvoltage relay (47) of all the buses was activated and alerted to the main control room.

3.3.4. Case 7,10

SUT high voltage side ground fault overcurrent relay (551GN) was operated and alerted to the main control room. Class-1E bus degraded voltage relay (127C) was operated and started the and tripped the incomming breaker of the Class-1E high voltage circuit breaker panel. The negative sequence overvoltage relay (47) of all the buses was activated and alerted to the main control room. 13.8kV Non-1E bus negative sequence overcurrent relay (246) was operated and shut off the high-voltage motor load of the Non-1E bus.

3.3.5. Case 8, 9, 11, 12

SUT high voltage side ground fault overcurrent relay (551GN) was operated and alerted to the main control room. Non-1E bus undervoltage relay (227M, 127M / T) was operated and shut off the Non-1E bus load. Class-1E bus degraded voltage relay (127, C) was operated and started the and tripped the incomming breaker of the Class-1E high voltage circuit breaker panel. The negative sequence overvoltage relay (47) of all the buses was activated and alerted to the main control room. 13.8kV Non-1E bus negative sequence overcurrent relay (246) was operated and shut off the high-voltage motor load of the Non-1E bus.

3.3.6. Case 13

During low load operation, there is no protection relay that can detect 1-phase fault on SUT high voltage side.

3.3.7. Case 14

SUT high voltage side ground fault overcurrent relay (551GN) was operated and alerted to the main control room. Non-1E bus undervoltage relay (227M, 127M / T) was operated and shut off the Non-1E bus load. Class-1E bus degraded voltage relay (127, C) was operated and started the and tripped the

incomming breaker of the Class-1E high voltage circuit breaker panel. The negative sequence overvoltage relay (47) of all the buses was activated and alerted to the main control room. 13.8kV Non-1E bus negative sequence overcurrent relay (246) was operated and shut off the high-voltage motor load of the Non-1E bus.

3.3.8. Case 15

SUT high voltage side ground fault overcurrent relay (551GN) was operated and alerted to the main control room. Non-1E bus undervoltage relay (227M, 127M / T) was operated and shut off the Non-1E bus load. Class-1E bus degraded voltage relay (127C) was operated and started the and tripped the incomming breaker of the Class-1E high voltage circuit breaker panel. The negative sequence overvoltage relay (47) of all the buses was activated and alerted to the main control room. 13.8kV Non-1E bus negative sequence overcurrent relay (246) was operated and shut off the high-voltage motor load of the Non-1E bus.

3.3.9. Case 16, 17, 18

Negative sequence overcurrent relay (346) of the main generator was activated and tripped the switchyard breaker. MT and SUT high voltage side neutral overcurrent relay (551GN) was operated and alerted to the main control room. The Class-1E bus under voltage relay (127C) was activated and started the EDG and tripped the incomming breaker of the Class-1E high voltage circuit breaker panel. The negative sequence overvoltage relay (47) of all the buses was activated and alerted to the main control room. The 13.8kV Non-1E negative sequence overcurrent relay (246) was operated and shut off the high-voltage motor load of the Non-1E bus.

4. Conclusion

In this paper, the ETAP model is used to analyze the detectability of the OPC in the on/off-site power system by using the protection relay for domestic standard nuclear power plants. The results of the analysis are as follows. In most cases, faults are detected by a protection relay when a fault occurs during normal operation of a power plant that supplies power to the on-site load through the main generator, auxiliary transformer and start-up transformer (cases 1-3,5,6). However, since it is not detectable in all cases, an abnormal power supply can be provided to the on-site load. In particular, there is no protection relay capable of detecting when a single-phase open occurs at the high voltage side of the start-up transformer (case 4).

In the event of a fault in the hot standby or start-up operation of the power plant, the protection relay detects the fault in most cases (case 7-12). If the start-up transformer is operated under light load, the fault can be detected by the protection relay due to the imbalance of current and voltage of on-site load of the start-up transformer side that failure occurs. (case 14-15) However, in case of one-phase open case, the degree of imbalance was insignificant and the protection relay could not detect the fault (case 13).

Overall, it was confirmed that the existing protection relay did not operate according to the operation mode of the power plant when the OPC occurred, and it was confirmed that the accident could be spread on the Cllass-1E bus. This means that neither type A nor B power plants are safe for OPC.

Therefore, it is necessary to construct separate Open Phase Detection (OPD) system[8][9][10] that can detect immediately when an OPC occurs and prevent the failure from spreading, and to transmit an alarm to the main control room.

The results of this study can be used as technical background data to improve the internal and external protection system of power plants and establish related regulations.

Conflict of Interest

The authors declare no conflict of interest.

Author Contributions

Balho H. Kim, Sanghoun Joung and Hongseok Jang conceived and designed the analysis; Soonhyun Hwang and Sanghoun Joung collected the data and performed the analysis; Soonhyun Hwang performed the simulation; Soonhyun Hwang and Balho H. Kim wrote the paper; all authors had approved the final version.

Acknowledgments

This work was supported by the Nuclear Safety Research Program through the Korea Foundation of Nuclear Safety (KoFONS) using the financial resource granted by the Nuclear Safety and Security Commission (NSSC) of the Republic of Korea. (No. 1305001)

References

[1] WANO. Significant Operating Experience Report. SOER 2015-1 Rev 1. 2015.

[2] IAEA. Impact of Open Phase Conditions on Electrical Power Systems of Nuclear Power Plants. Safety Reports Series No.91. 2016.

[3] BL 2012-01. Design Vulnerability in Electric Power System. U.S. Nuclear Regulatory Commission. July 27. 2012.

[4] NUREG-0800. Standard Review Plan. BTP 8-9. Open Phase Conditions in Electric Power System. Rev.0. U.S. Nuclear Regulatory Commission. July 2015.

[5] Soon-Hyun Hwang, Bal-Ho H. Kim, Geun-Joon Lee, Jae-Won Lee, Hong-Seok Jang, Sang-Houn Joung. Vulnerability Analysis for Open Phase Condition in Electric Power System of Korea's Nuclear Power Generating Station. ICCSS 2017.

[6] Soon-Hyun Hwang, Bal-Ho H. Kim, Sang-Houn Joung, Hong-Seok Jang. Detectability Analysis of Open Phase Condition in Korea's Standard Nuclear Power Plant. *International Journal of Smart Grid and Clean Energy.* (to appear)

[7] Operation Technology Inc. ETAP 12.6 User Guide. Mar. 2014.

[8] EPRI. Interim Report: EPRI Open-Phase Detection Method. 3002004432 2014.10

[9] Shih-Chin Y, Yu-Liang H, Po-Huan C, Guan-Ren C, Da-Ren J. Online open-phase fault detection for permanent magnet machines with low fault harmonic magnitudes. *IEEE Transactions on Industrial Electronics*. May 2018; 65(5).

[10] Che-Wung H, Do-Hwan L. Open-phase condition detecting system for transformer connected power line in nuclear power plant. The Transactions of the Korean Institute of Electrical Engineers 2015; 64(2): 254～259.

Copyright © 2020 by the authors. This is an open access article distributed under the Creative Commons Attribution License (CC BY-NC-ND 4.0), which permits use, distribution and reproduction in any medium, provided that the article is properly cited, the use is non-commercial and no modifications or adaptations are made.