International Journal of Smart Grid and Clean Energy

Magnetic field analysis in various material of the transmitter and the receiver in wireless power transfer

Padej Pao-la-or , Pornrujee Burun

School of Electrical Engineering, Institute of Engineering, Suranaree University of Technology, Nakhon Ratchasima 30000, Thailand

Abstract

There is a developing for electric vehicle (EV) because of their lower fuel and greenhouse gas. Wireless power transfer (WPT) is easy to use ways to recharge, but the problem with the current wireless charging technology for electric vehicle are low efficiency and slow charging time. This paper presents the design parameters of permeability and conductivity in various material of the transmitter and the receiver which performs in the partial differential equation. The paper simulation using 3-D finite element method that all the coded developed by MATLAB program and show the graphical representation for the magnetic field of the WPT.

Keywords: Wireless charging, wireless power transfer (WPT), magnetic field, electric vehicle (EV), 3-D finite element method (3-D FEM).

1. Introduction

Electric vehicles (EVs) have been projected as one of the next-generation methods of transportation. Designed to manage the environmental and energy but the demand is still relatively low. However, it is widely known that EVs have several disadvantages. First, the current plug-in charging method prevents an EVs from operating while the battery is being charged, A considerable amount of recharging downtime. Wireless charging EVs have been introduced to solve the problems above [1].

The wireless power transfer technology has obtained increasing attention recently [2], [3]. It is a method for contactless power transmission. It is based on the transmission of energy from a transmission coil to a receiver coil through a magnetic field. The wireless power transfer has been used in a variety of applications, such as biomedical devices, automotive systems, industrial manufacturing, and test systems, and in some consumer electronics [4]–[7]. Also, the wireless charging system can be to dispose of above-ground electric wire. The main problem to this technology is the large air gap between the transmission coil and the receiver coil, resulting from a leakage magnetic flux, designing high- power high-efficiency capacitive WPT systems for EV charging is very challenging.

The remainder of this paper is organized as follows: Section 2, the mathematical model of the wireless power transfer (WPT) system. The 3-D finite element method (3-D FEM) by using Galerkin approach applied from WPT to obtain magnetic field distribution and specifies the WPT dimensions. Section 3 presents the design parameter in various material of the WPT and simulation results. Finally, Section 4 the conclusion of the study.

2. Mathematical Modeling for Magnetic Field of WPT and Simulation Parameters

Finite element method is the most efficient numerical technique [8] for solving the partial differential equations (PDE) such as electromagnetic problem, temperature rise, and heat transfer problem [9].

* Manuscript received March 27, 2019; revised January 8, 2020.
Corresponding author. Tel.: +66-44-22-4400; *E-mail address*: padej@sut.ac.th.
doi: 10.12720/sgce.9.2.274-281

Regarding wireless power transfer (WPT) magnetic problems, the magnetic field intensity (H) is associated with the magnetic field *(B)*, $B = \mu H$. Which can be shown the PDE as follow (1) [10].

$$\frac{\partial^2 H}{\partial x^2}+\frac{\partial^2 H}{\partial y^2}+\frac{\partial^2 H}{\partial z^2}-\frac{1}{v^2}\left(\frac{\partial^2 H}{\partial t^2}\right)-\mu\sigma\left(\frac{\partial H}{\partial t}\right)=0 \tag{1}$$

where,

H is the magnetic field intensity (A/m)

v is propagation velocity of the magnetic field (m/s)

μ is permeability of material (H/m) while permeability of free space (μ_0) is $4\pi \times 10^{-7}$ H/m

σ is electrical conductivity of the material (S/m)

t is time (s)

The magnetic field propagation velocity can be explained by the relation between electric permittivity (ε) and magnetic permeability (μ), which can be shown in (2)

$$v=\frac{1}{\sqrt{\mu\varepsilon}} \tag{2}$$

Where, $\varepsilon = \varepsilon_0\varepsilon_r$ is permittivity of material (F/m) while permittivity of free space (ε_0) is 8.854×10^{-12} F/m. Therefore, the PDE as follow (3)

$$\frac{\partial^2 H}{\partial x^2}+\frac{\partial^2 H}{\partial y^2}+\frac{\partial^2 H}{\partial z^2}-\mu\varepsilon\left(\frac{\partial^2 H}{\partial t^2}\right)-\mu\sigma\left(\frac{\partial H}{\partial t}\right)=0 \tag{3}$$

This paper has considered the system by using time-harmonic mode and representing the magnetic field intensity in complex form therefor [11],

$$\frac{\partial H}{\partial t}=j\omega H \tag{4}$$

$$\frac{\partial^2 H}{\partial t^2}=-\omega^2 H \tag{5}$$

where, ω is the angular frequency (rad/s).

From (3), we have considered the problem in three dimensions, therefore, the magnetic field intensity equation in x, y and z-direction, which can be shown in (6).

$$\frac{\partial^2 H}{\partial x^2}+\frac{\partial^2 H}{\partial y^2}+\frac{\partial^2 H}{\partial z^2}-\left(j\mu\omega\sigma-\mu\omega^2\varepsilon\right)H=0 \tag{6}$$

This paper refers to the modelling of WPT scaling of dimension, which is as follows Fig. 1 and Fig. 2. The air gap between transmitter and receiver is set as 76.2 mm. The coil has a 290 mm radius with a 2 mm thickness, with the operating frequency of 50 kHz [12].

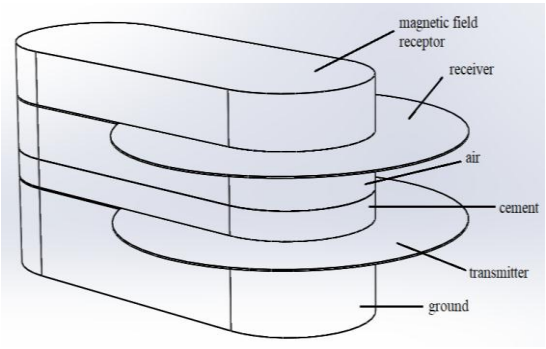

Fig. 1. The material of WPT

Finite element method for solving the PDE in (6) follow these steps.

The first step, the division of the problem into the nodes and elements. The general of an element in three dimensions is linear tetrahedral. This can be accomplished by using Solid Works for 3-D grid generation. Which has a number of nodes is 3,638 and the number of elements is 15,818 can be shown in Fig. 3.

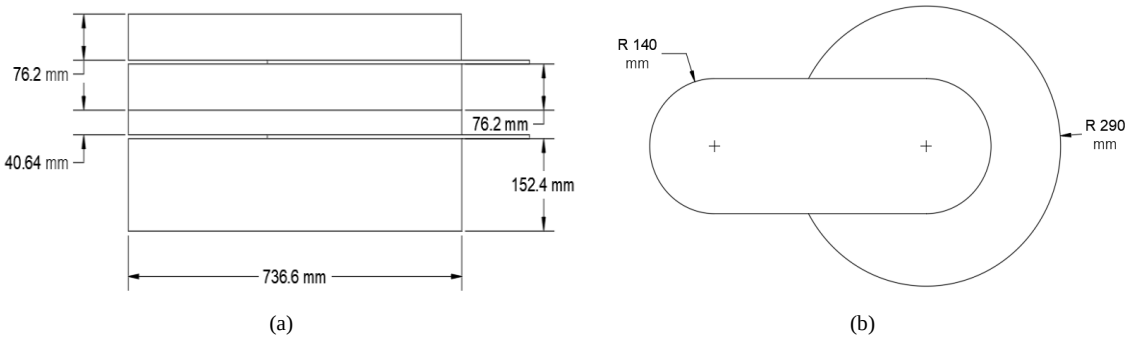

Fig. 2. The dimension of modeling WPT (a) front view (b) top view

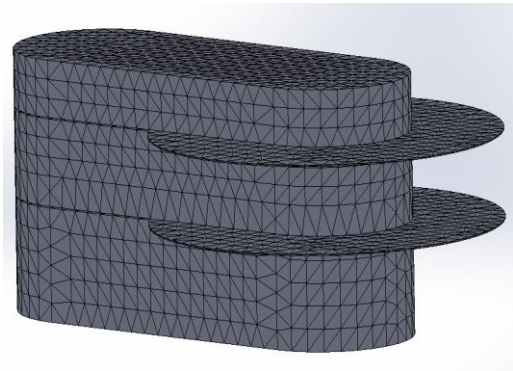

Fig. 3. Mesh of the WPT

The second step, formulating the shape function of each element in three dimensions. According to this method, the magnetic field intensity is shown in (7) [13].

$$H(x,y,z) = H_i N_i + H_j N_j + H_k N_k + H_l N_l \tag{7}$$

where, N_n, $n = i,j,k,l$ are the shape functions, and H_n, $n = i,j,k,l$ are the magnetic field intensity at node for each element. The shape function can be written as (8).

$$N_n = \frac{1}{6V}\left(a_n + b_n x + c_n y + d_n z\right) \tag{8}$$

where, V is the volume of each tetrahedral element, which defined as (9)

$$V = \frac{1}{6}\begin{vmatrix} 1 & x_i & y_i & z_i \\ 1 & x_j & y_j & z_j \\ 1 & x_k & y_k & z_k \\ 1 & x_l & y_l & z_l \end{vmatrix} \tag{9}$$

And the positional coefficient defined by

$$a_1 = x_4(y_2z_3 - y_3z_2) + x_3(y_4z_2 - y_2z_4) + x_2(y_3z_4 - y_4z_3) \qquad b_1 = y_4(z_3 - z_2) + y_3(z_2 - z_4) + y_2(z_4 - z_3)$$
$$a_2 = x_4(y_3z_1 - y_1z_3) + x_3(y_1z_4 - y_4z_1) + x_1(y_4z_3 - y_3z_4) \qquad b_2 = y_4(z_3 - z_2) + y_1(z_3 - z_4) + y_3(z_4 - z_1)$$
$$a_3 = x_4(y_1z_2 - y_2z_1) + x_2(y_4z_1 - y_1z_4) + x_1(y_2z_4 - y_4z_2) \qquad b_3 = y_4(z_3 - z_2) + y_2(z_1 - z_4) + y_1(z_4 - z_2)$$
$$a_4 = x_3(y_2z_1 - y_1z_2) + x_2(y_1z_3 - y_3z_1) + x_1(y_3z_2 - y_2z_3) \qquad b_4 = y_3(z_3 - z_2) + y_1(z_2 - z_3) + y_2(z_3 - z_1)$$

$$c_1 = x_4(z_2 - z_3) + x_2(z_3 - z_4) + x_3(z_4 - z_2) \qquad d_1 = x_4(y_3 - y_2) + x_3(y_2 - y_4) + x_2(y_4 - y_3)$$
$$c_2 = x_4(z_3 - z_1) + x_3(z_1 - z_4) + x_1(z_4 - z_3) \qquad d_2 = x_4(y_1 - y_3) + x_1(y_3 - y_4) + x_3(y_4 - y_1)$$
$$c_3 = x_4(z_1 - z_2) + x_1(z_2 - z_4) + x_2(z_4 - z_1) \qquad d_3 = x_4(y_2 - y_1) + x_2(y_1 - y_4) + x_1(y_4 - y_2)$$
$$c_4 = x_3(z_2 - z_1) + x_2(z_1 - z_3) + x_1(z_3 - z_2) \qquad d_4 = x_3(y_1 - y_2) + x_1(y_2 - y_3) + x_2(y_3 - y_1)$$

The third step, from (6) is Galerkin approach equation as referring to the differential equation was then adapted by using the weighted residual method, in which element domain V as in (9) was done by using the integrations as in (10) [14].

$$\frac{\partial^2 H}{\partial x^2} + \frac{\partial^2 H}{\partial y^2} + \frac{\partial^2 H}{\partial z^2} - \left(j\mu\omega\sigma - \mu\omega^2\varepsilon\right)H = R \tag{10}$$

where R is the residual function. The method of the weighted residual with Galerkin approach applied to the PDE. Therefore, the residual function expresses as (11).

$$\int_v N_n \left[\frac{\partial}{\partial x}\left(\frac{\partial H}{\partial x}\right) + \frac{\partial}{\partial y}\left(\frac{\partial H}{\partial y}\right) + \frac{\partial}{\partial z}\left(\frac{\partial H}{\partial z}\right) - (j\omega\mu\sigma - \mu\omega^2\varepsilon)H \right] dV = 0 \tag{11}$$

From (11) can be divided into two parts as follows.

$$\int_v N_n \left[\frac{\partial}{\partial x}\left(\frac{\partial H}{\partial x}\right) + \frac{\partial}{\partial y}\left(\frac{\partial H}{\partial y}\right) + \frac{\partial}{\partial z}\left(\frac{\partial H}{\partial z}\right) \right] dV - \int_v N_n \left[(j\omega\mu\sigma - \mu\omega^2\varepsilon)H \right] dV = 0$$

Or in the compact matrix form

$$[K + M]\{H\} = 0 \tag{12}$$

where $[K]$ is the permeability matrix of the problem and element equation can be written in term of the matrix with 4x4 size, which shown in (13).

$$[K]_{4\times4} = \frac{1}{36V}\begin{bmatrix} b_1b_1 + c_1c_1 + d_1d_1 & b_1b_2 + c_1c_2 + d_1d_2 & b_1b_3 + c_1c_3 + d_1d_3 & b_1b_4 + c_1c_4 + d_1d_4 \\ & b_2b_2 + c_2c_2 + d_2d_2 & b_2b_3 + c_2c_3 + d_2d_3 & b_2b_4 + c_2c_4 + d_2d_4 \\ & & b_3b_3 + c_3c_3 + d_3d_3 & b_3b_4 + c_3c_4 + d_3d_4 \\ Sym & & & b_4b_4 + c_4c_4 + d_4d_4 \end{bmatrix} \tag{13}$$

where $[M]$ is the constant matrix depends on the constant of electrical conductivity, permeability, permittivity, and angular frequency as follows equation (14).

$$[M]_{4\times4} = \frac{\left(j\omega\mu\sigma - \mu\varepsilon\omega^2\right)}{20}\begin{bmatrix} 2 & 1 & 1 & 1 \\ 1 & 2 & 1 & 1 \\ 1 & 1 & 2 & 1 \\ 1 & 1 & 1 & 2 \end{bmatrix} \tag{14}$$

Fourth step, applying the boundary conditions in term of Dirichet, at surface of the transmitter boundary conditions is 400 A/m [15].

Fifth step, solving the linear equation for calculation a result of the magnetic field intensity. Then magnetic field calculation, $B = \mu H$.

For the simulation parameters, the finite element method was used for solving the PDE in this paper. The parameters for simulation depends on (13) – (14). However, All of the parameter simulation shown in the Table 1 [12], [15].

Table 1. Parameters of WPT simulation

Material	Permeability (μ_r)	Conductivity (σ)	permittivity (ε_r)
Ground	0	0	1
Cement	150	0.1 S/m	1
Air	1.00000037	0	1.00058986
Magnetic field receptor	1	1 S/m	1

3. Designing Parameters in Various Material of the WPT and Simulation Results

This paper has considered the magnetic field in the magnetic field receptor of the wireless power transfer (WPT). From the mathematical modeling, we see that there are three parameters: relative permeability (μ_r), conductivity (σ) and relative permittivity (ε_r). From the testing found that relative permittivity (ε_r) has a very small effect on the system. It is not considered to affect the system. In this case, the permittivity of the transmitter and the receiver is 1. In this paper, we are proposed compare between the relative permeability (μ_r) and conductivity (σ) of the transmitter and the receiver. To analyze which parameters of the coil has affected to a magnetic field receptor of WPT.

For the simulation, this paper has considered the magnetic field receptor of WPT using finite element method, which a new created material all 4 type: A, B, C and D. The new design parameters of the transmitter and receiver shown in Table 2. For the simulation results, A magnetic field of the WPT and the magnetic field receptor which supplied from material Type A, Type B, Type C and Type D shown as Fig. 4 – 7, respectively.

Table 2. The parameters in various of the transmitter and the receiver

Material Type	Relative Permeability (μ_r)	Conductivity (σ)
A	4,000	1.0000 S/m
B	4,000	0.2000 S/m
C	9,000	1.0000 S/m
D	9,000	0.2000 S/m

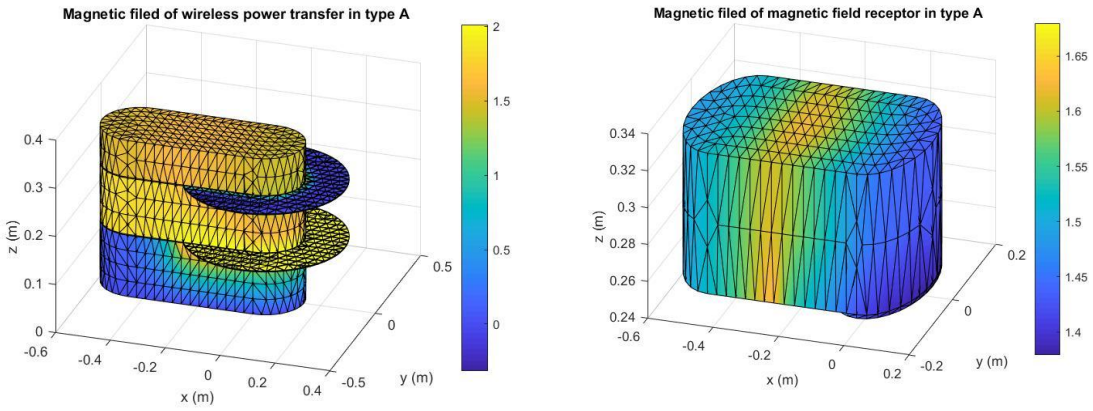

(a) (b)

Fig. 4. A magnetic field (T) in Type A (a) wireless power transfer (b) magnetic field receptor

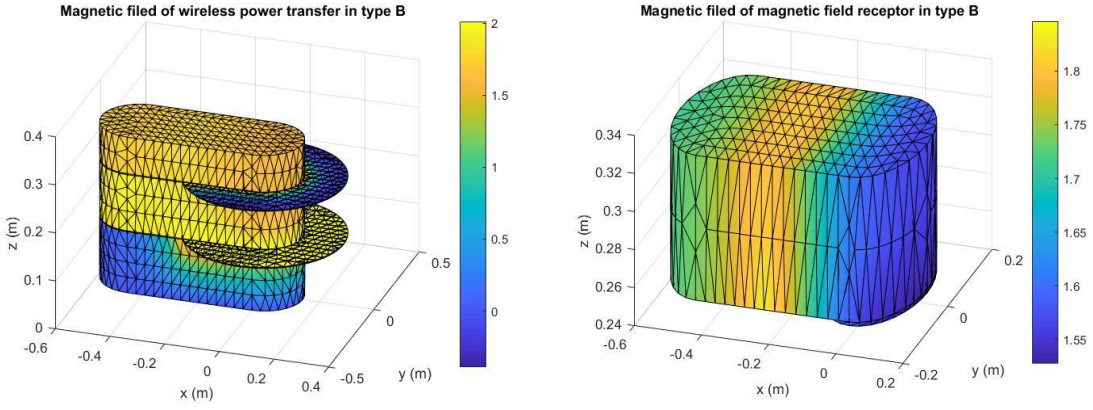

(a) (b)

Fig. 5. A magnetic field (T) in Type B (a) wireless power transfer (b) magnetic field receptor

Table 3. Maximum, minimum and average of the magnetic in the transmitter

Results	Maximum (T)	Minimum (T)	Average (T)
A	2.0116	1.8464	2.0045
B	2.0116	1.8464	2.0046
C	4.5261	4.1544	4.5101
D	4.5260	4.1545	4.5102

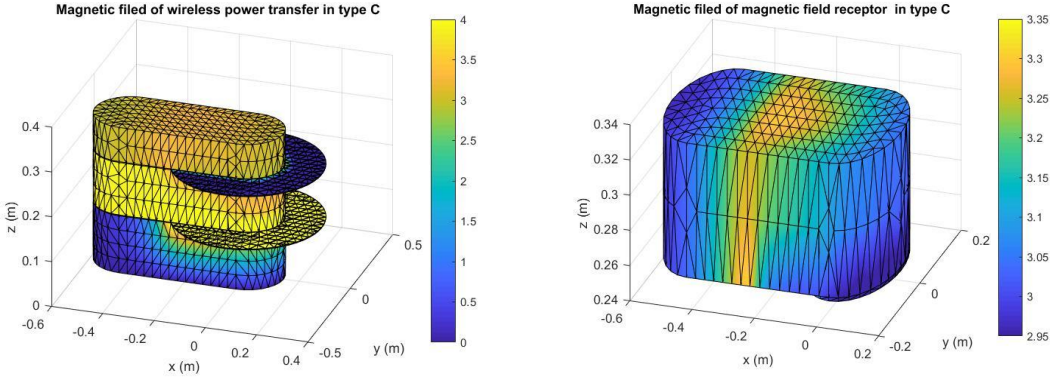

(a) (b)

Fig. 6. A magnetic field (T) in Type C (a) wireless power transfer (b) magnetic field receptor

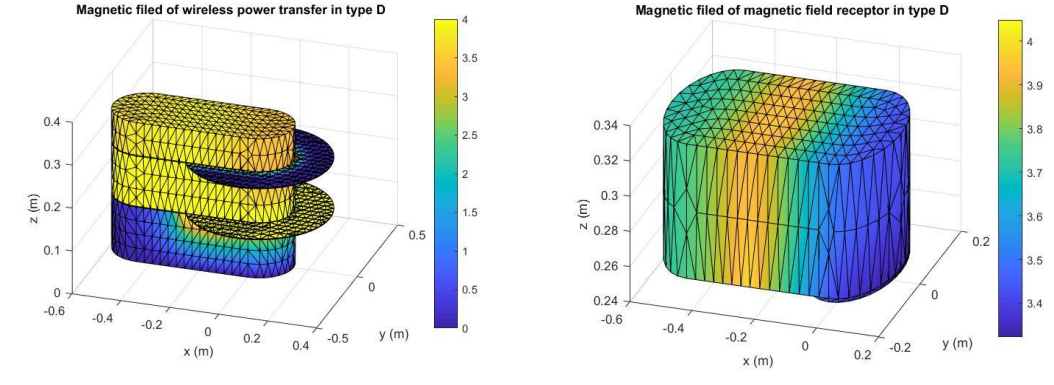

(a) (b)

Fig. 7. A magnetic field (T) in Type D (a) wireless power transfer (b) magnetic field receptor

Table 4. Maximum, minimum and average of the magnetic in the magnetic field receptor

Results	Maximum (T)	Minimum (T)	Average (T)	Transfer efficiency (%)
A	1.7760	1.4198	1.6237	81.00
B	1.8739	1.5405	1.7168	85.64
C	3.8073	3.0436	3.4913	77.41
D	4.1527	3.3713	3.8676	85.75

From Fig. 4 – 7 shows the 3-D a magnetic field, we will see that the magnetic field appears to be symmetric around the coil and the core. From the Table 3 and Table 4 show a maximum, minimum and average comparison of the magnetic field in the transmitter and magnetic field receptor, to see that average of the transmitter and magnetic field receptor have a magnetic field loss. Two ideas are proposed in this paper to enhance the magnetic mutuality between the transmitter and the receiver and reduces magnetic field loss: 1) we be changing the conductivity and be unchanged the permeability of the transmitter and the receiver. 2) we be changing the permeability and be unchanged the conductivity of the transmitter and the receiver. Two ideas have an effect to the magnetic field of the magnetic field receptor will be increased.

From the Table 4 which is an average of the magnetic field in the magnetic field receptor, to see that Type D has a 3.8676 T. It is a higher magnetic field, 85.75% magnetic field transfer efficiency was achieved in terms of the transmitter and the magnetic field receptor. We will see that the magnetic field transfer efficiency in Type B and D have a similar value, although two type have the permeability unequal. Therefore, this simulation result can be helped to the guideline for designing the transmitter and the receiver of wireless power transfer that has a higher the magnetic field transfer efficiency. The property of the material for the transmitter and the receiver must be low conductivity. Because increase the permeability has a very small effect on the magnetic field transfer efficiency.

4. Conclusion

This paper simulation via the 3-D finite element method for solving the partial differential equation of the magnetic field to design the transmitter and the receiver of wireless power transfer. The wireless power transfer that has a higher the magnetic field transfer efficiency. The property of the material for the transmitter and the receiver must be low conductivity. Improved magnetic field transfer efficiency decreases charging time and will lead to more robust and reliable EV charging mechanisms. A resonant frequency of wireless power transfer for loss reduction will analyze as the future research. On the other hand, In terms of manufacturing there are many factors to determine.

Conflict of Interest

The authors declare no conflict of interest.

Author Contributions

Pao-la-or conducted the research; Burun analyzed the data; Pao-la-or and Burun wrote the paper; all authors had approved the final version.

Acknowledgment

This work was supported by School of Electrical Engineering, Institute of Engineering, Suranaree University of Technology.

References

[1] I. Hwang, Y. J. Jang, Y. D. Ko, M. S. Lee, "System Optimization for Dynamic Wireless Charging Electric Vehicles Operating in a Multiple-Route Environment," *IEEE Transaction on Intelligent Transportation Systems*, Vol. 19, No. 6, pp. 1709-1725, June 2018.

[2] S. Y. Choi, B. W. Gu, S. Y. Jeong, and C. T. Rim, "Advances in wireless power transfer systems for roadway-powered electric vehicles," *IEEE Journal Of Emerging And Selected Topics In Power Electronics*, Vol. 3, No. 1, pp. 18-36 March 2015.

[3] S. Li and C. C. Mi, "Wireless power transfer for electric vehicle applications," *IEEE Journal Of Emerging And Selected Topics In Power Electronics*, Vol. 3, No. 1, pp. 4-17, March 2015.

[4] S. Hui and W. Ho, "A new generation of universal contactless battery charging platform for portable consumer electronic equipment," *IEEE Transaction on Power Electronics*, Vol. 20, No. 3, pp. 620-627, May 2005.

[5] P. Li and R. Bashirullah, "A wireless power interface for rechargeable battery operated medical implants," *IEEE Transaction on Circuits and System*, Vol. 54, No. 10, pp. 192-196, October 2007.

[6] C. Wang, O. H. Stielau, and G. A. Covic, "Design considerations for a contactless electric vehicle battery charger," *IEEE Transaction on Industrial Electronics*, Vol. 52, No. 5, pp. 1308-1314, October 2005.

[7] M. Budhia, V. Vyatkin, G. A. Covic, "Powering flexible manufacturing systems with intelligent contact-less power transfer," 6th IEEE International Conference on Industrial Informatics (INDIN 2008) , pp. 1160-1165, Daejeon Korea, 2008.

[8] M.V.K. Chari, and S.J. Salon, "Numerical Methods in Electromagnetism," *Academic Press*, USA, 2000.

[9] W. Lewis, P. Nithiarasu, N. Seetharamu, "Fundamentals of the Finite Element Method for Heat and Fluid Flow," John Wiley & Sons, USA, 2004.

[10] A. Bunmat, P. Pao-la-or., "Analysis of Magnetic Field Effects Operators Working a Power Transmission Line Using 3-D Finite Element Method," 18th International Conference on Electrical machine and System (ICEMS 2015), pp. 1187-1191, Pattaya Thailand, 2015.

[11] P. Pao-la-or, A. Isaramongkolrak, T. Kulworawanichpong, "Finite Element Analysis of Magnetic Field Distribution for 500-kV Power Transmission Systems," *Engineering Letters*, Vol.18, No.1, pp. 1-9, 2010.

[12] M.H. Mahmud, W. Elmahmoud, M.R. Barzegaran, N.A. Brake, "Efficient Wireless Power Charging of Electric Vehicle by Modifying the Magnetic Characteristics of the Transmitting Medium," *IEEE Transaction on Magnetics*, Vol. 53, No. 6, pp. 192-196, June 2017.

[13] S. Vacharakup, M. Peerasaksophol, T. Kulworawanichpong, P. Pao-la-or, "Study of Natural Frequencies and Characteristics of Piezoelectric Transformers by Using 3-D Finite Element Method," *Applied Mechanics and Materials*, vols. 110-116, pp. 61-66, 2012.

[14] P.I. Kattan, "MATLAB Guide to Finite Elements (2nd edition)," *Springer Berlin Heidelberg*, USA, 2007.

[15] A. Hirata, T. Sunohara, I. Laakso, T. onishi "SAR in a Simplified Human Model Due to wireless power Transfer with Induction Coupling," 7th European Conference on Antennas Propagation (EUCAP 2013) , pp. 1769-1772, 2013.