Renewable Energy Forecasting with Hybrid Nonlinear Model (ANFIS): Case Study of Wind Speed in Thailand

[illegible]

1. Introduction

[illegible]

[illegible]

$$y_t = Linear_t + Nonlinear_t + e_t \qquad \text{s}$$

[illegible]

2. Methodology

2.1. ARIMA linear time aeries model

[illegible]

$$y_t = \sum_{i=1}^{p} \alpha_i y_{t-i} + \sum_{j=1}^{q} \beta_j e_{t-j} + \varepsilon_t$$

2.2. ANN nonlinear time series model

$$y_i = f(x_i W_i + B_i)$$

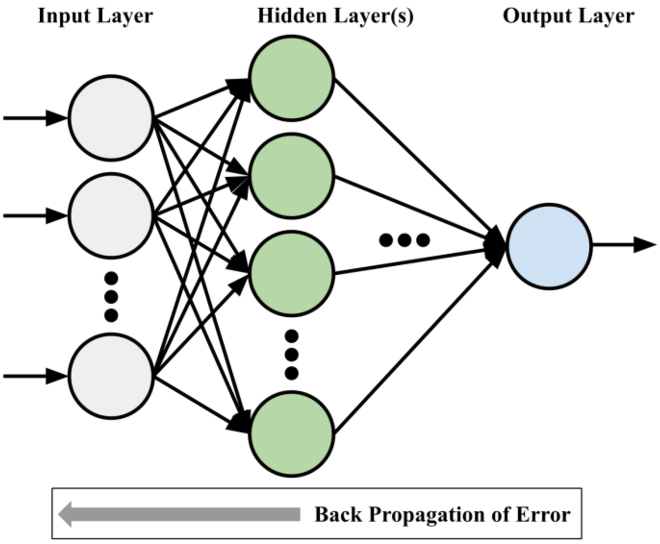

2.3. LSTM nonlinear deep learning model

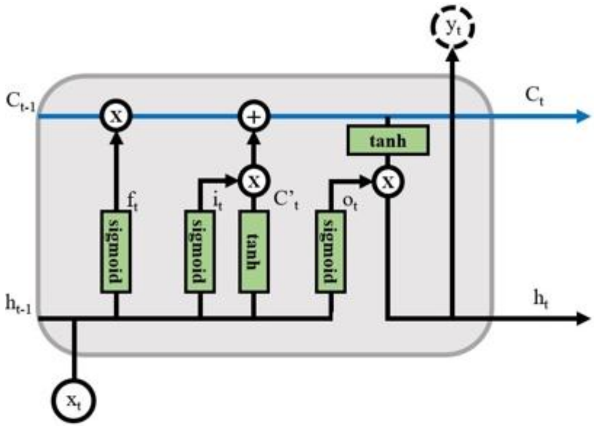

2.4. ANFIS nonlinear hybrid time series model

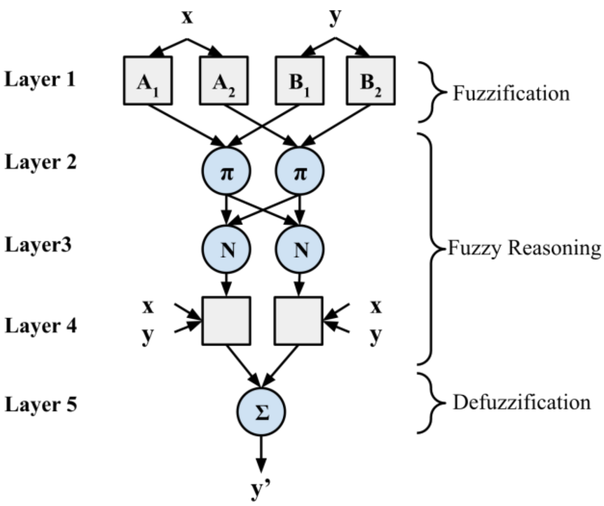

$$If\ x\ is\ A_1\ and\ y\ is\ B_1, Then\ f_1 = p_1x + q_1y + r_1,$$
$$If\ x\ is\ A_2\ and\ y\ is\ B_2, Then\ f_2 = p_2x + q_2y + r_2$$

2.5. Model assessment

[illegible]

$$e_t = y_t - y'_t \qquad \text{x}$$

$$\text{MAE} = \frac{1}{n}\sum_{t=1}^{n} |e_t| \qquad \text{y}$$

$$\text{MAPE} = \frac{1}{n}\sum_{t=1}^{n} \left|\frac{e_t}{y_t}\right| \times 100 \qquad \text{z}$$

$$\text{RMSE} = \sqrt{\frac{1}{n}\sum_{t=1}^{n} (e_t)^2} \qquad \{$$

$$\%\text{RMSE} = \frac{RMSE}{\bar{y}} \times 100 \qquad \text{s r}$$

$$\text{R}^2 = 1 - \frac{\sum_{t=1}^{n} (e_t)^2}{\sum_{t=1}^{n} (y_t - \bar{y})^2} \qquad \text{s s}$$

3. Experimentation

3.1. Dataset

[illegible]

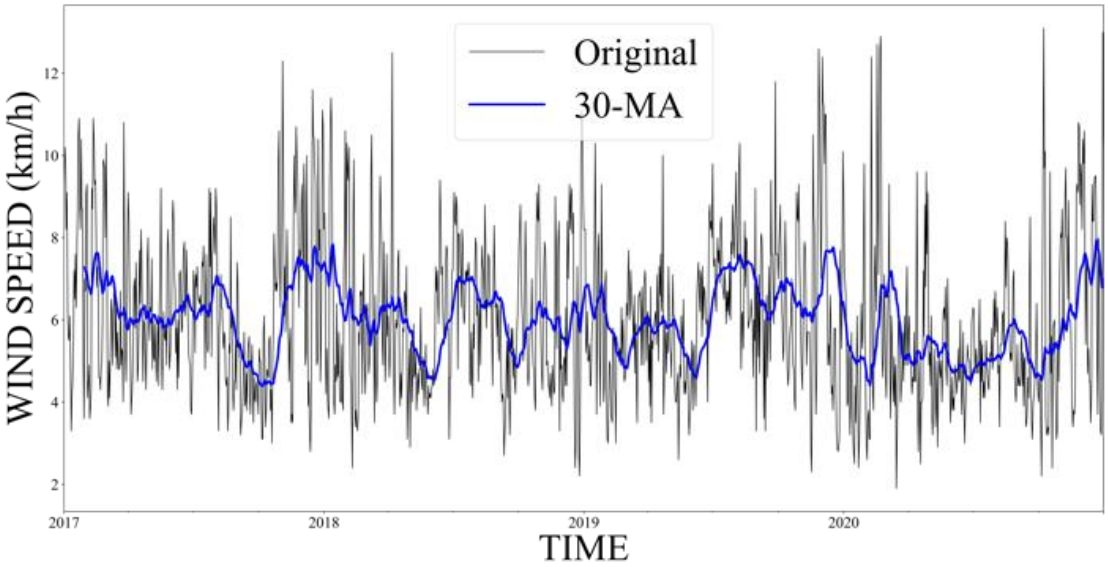

[illegible]

3.2. Research workflow

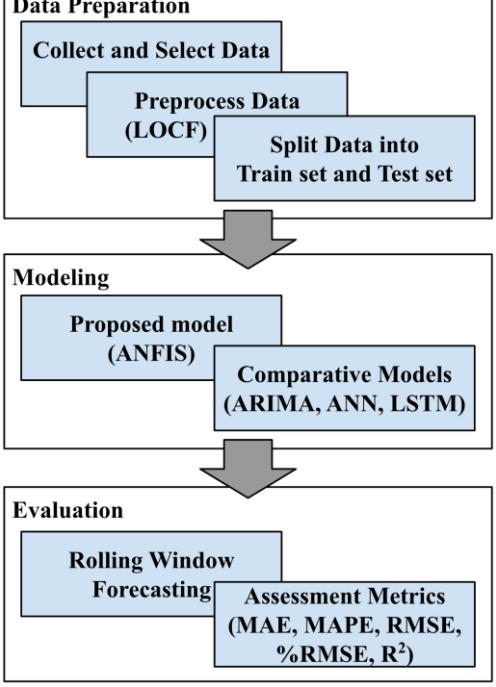

4. Results and Discussion

4.1. The results

[illegible]

	MAE	MAPE	RMSE	%RMSE	R-Square
ARIMA	1.0668	18.7673	1.4006	22.6709	0.4228
ANN	1.0206	17.8113	1.3428	21.7704	0.4653
LSTM	0.8860	15.7191	1.16092	18.8212	0.6003
ANFIS	1.0477	18.5201	1.3791	22.3598	0.4359

[illegible]

	MAE	MAPE	RMSE	%RMSE	R-Square
ARIMA	1.1463	22.4311	1.5561	27.8098	0.4119
ANN	1.1904	23.5462	1.5981	28.5605	0.3797
LSTM	1.3790	28.0452	2.0202	36.1047	0.0088
ANFIS	1.1516	22.8986	1.5566	27.8182	0.4115

4.2. Discussion

[illegible]

[illegible]

[illegible]

[illegible]

	Number of Parameters	Number of Neural Nodes	Time Consumption (Seconds)
ANN	17,153	256	1106.2978
LSTM	66,689	128	1901.3514
ANFIS	20 with 2 fuzzy rules	22	9.4320

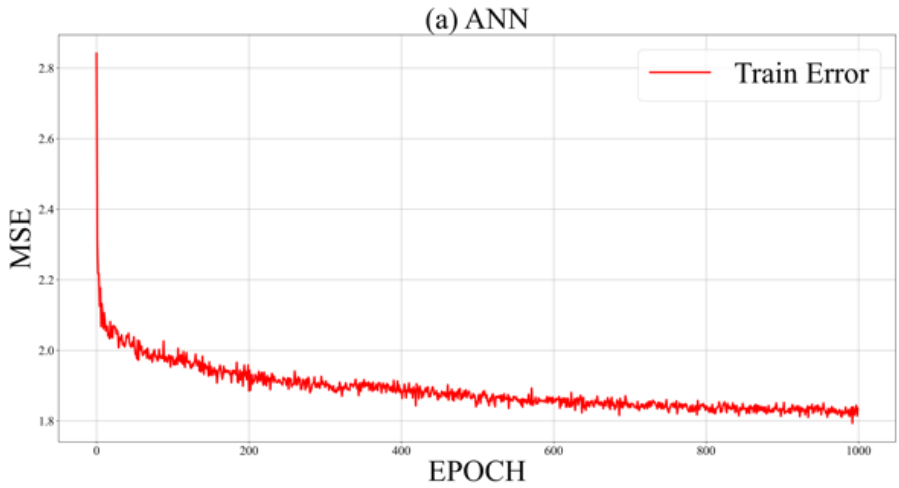

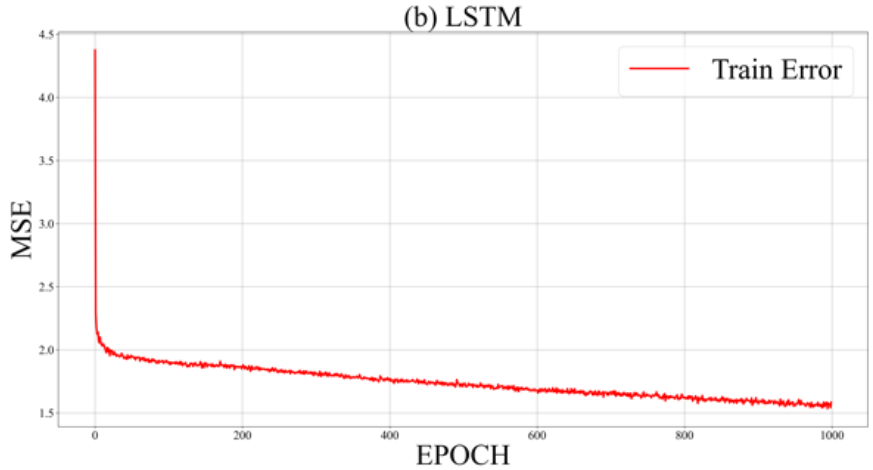

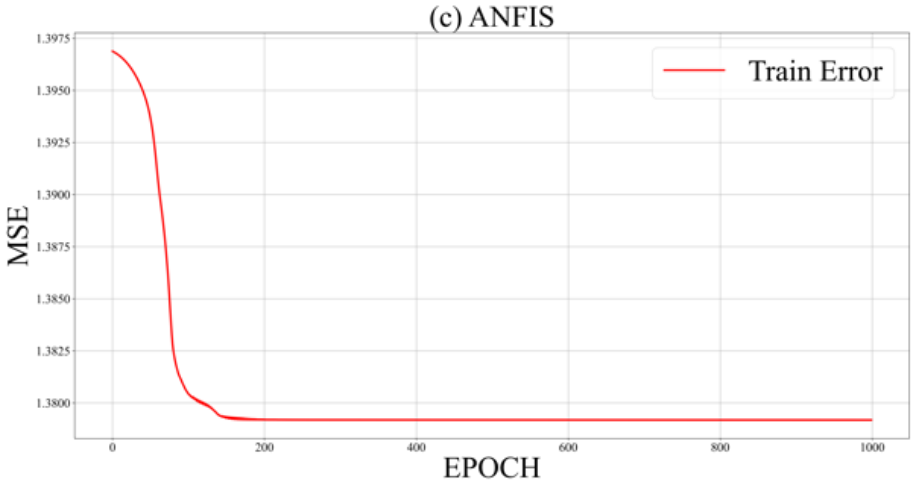

‹ ‰ ä x ä ‰ ” Š’ ‡ Š • • Š ‘ – ™ ƒ ‹ • ‰ • ‰ ‡ ” ƒ ‘ ” • á ˆ „ á ƒ • † . . ä

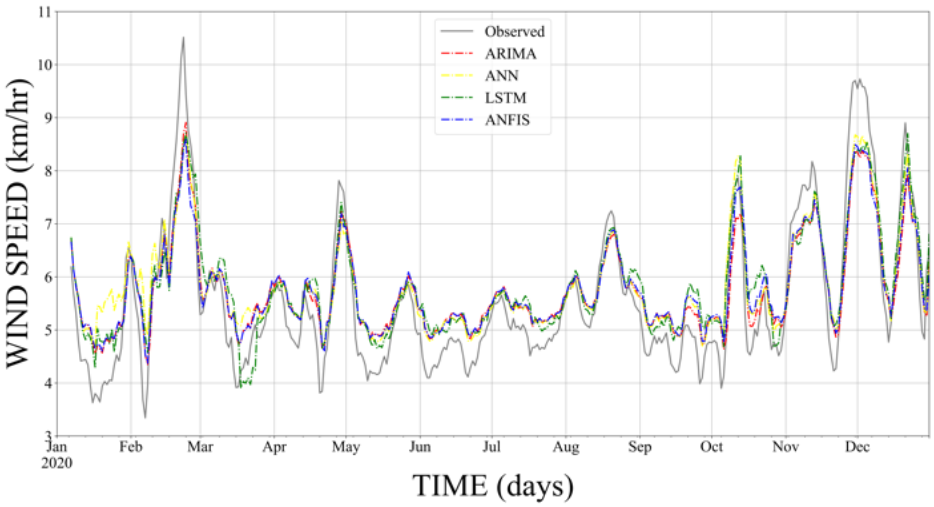

‹ ‰ ä y ä Š ‡ ” ‡ • — Ž – • ‘ ˆ ™ ‹ • † • ’ ‡ ‡ † ˆ ‘ ” ‡ … ƒ • – ‹ • ‰ † ƒ › ƒ Š ‡ ƒ † ‘ ˆ

5. Conclusion

Š ‹ • ” ‡ • ‡ ’ ƒ ” ‡ . . ‡ Š • – • ƒ – ‹ • ‡ • ‡ ” ‹ ‡ • • ‘ † ‡ Ž ˆ ‘ ” ˆ ‘ ” ‡ … ƒ • – ‹ • ‰ ™ ‹ • † • ’ ‡ ‡ † — • ‹ • ‰
• ‘ • Ž ‹ • ‡ ƒ ” Š › „ ” ‹ † ƒ Ž ‰ ‘ ” ä – Š Š ‡ • ‡ – ‡ ‘ ” ‘ Ž ‘ ‰ ‹ … ƒ Ž † ƒ – ƒ — • ‡ † — Š Š ‡ ‘ ‡ Š • ‡ † ƒ • – ƒ
ƒ ˜ ƒ ‹ Ž ƒ „ Ž • ‡ – Š ‡ Š ƒ ‹ ‡ – ‡ ‘ ” ‘ Ž ‘ ‰ ‹ … ƒ Ž ‡ ’ ƒ ” – ƒ • ‡ – ä ‹ ‘ • Š ‡ ‘ ƒ ‰ ‡ – ƒ • † ƒ – ‡ • –
• ‡ – ƒ – ƒ ” ƒ – ‹ ‘ ˆ y w ¨ ƒ • † t w ” á ’ ‡ ” ‡ ˆ ‘ ” ‡ ƒ . . – . ‹ ‡ ‡ Ž . ‹ ä á ’ ƒ ” ‹ • ‘ • • – ƒ – ‹ • – ‹ … ƒ Ž – ‹ • ‡ • ‡ ” ‹ ‡
ƒ • † ƒ • † • ‡ — ” ƒ Ž • ‡ – Š ™ ƒ ” ‡ ƒ ‘ Ž ‡ ‡ Ž ‡ ‡ Ž ‘ ’ ‡ † – ‘ . . ƒ ‰ ’ ƒ ‹ • ‡ Š ‡ ‘ ’ ‘ • ‡ †
• ‘ † ‡ Ž ä

‘ ” ‡ ˆ ˆ ‹ … ‹ ‡ ˜ ƒ . Ž ‹ ƒ ˆ ‹ Š ‡ – ‹ • ‡ • ‡ ” ‹ ‡ ‘ • ‘ • ‡ † ‡ Ž – Š ‹ • ” ‡ á ‡ ƒ Š ‡ . Š • • ‡ • • • ‡ • – Š ƒ • „ ‡ ‡ •
‹ • – ™ ‘ ƒ • ä ‡ . ” • • á – Š ‡ ‡ ˆ ˆ ‹ … ‹ ‡ • … › ‘ ˆ ˆ ‘ ” ‡ … ƒ • – ‹ • ‰ ‹ • ‡ • – ‹ • ƒ – ‡ † ˆ Š ‡ á á
– Š ‡ – ” — … – – ” Ž ‡ ƒ • † • ‹ • ‰ ‡ • ˆ ‘ ˆ ‡ Š ‡ ‡ Ž • ƒ ” ‡ … ‘ • • ‹ ‡ ‡ Ž ‡ ‡ † . . – ‘ – Š ‡ … ‘ • ’ Ž ‡ š ‹ – › ‘ ˆ – Š ‡
” ‡ • — Ž – • ‘ ˆ † ‡ Ž ‡ ” ˆ ‘ ” • ƒ • … ‡ ‡ ˜ ƒ Ž ” ‡ ˜ ƒ ‡ Š Ž ƒ – – Š ‡ ’ ” ‘ ’ ‘ • ‡ – † ‹ • ‡ • ‡ ” ‹ ‡ • ‹ • ‡ Ž ‡ Ž ‰ Š – Ž ›
„ ‡ – – ‡ ” – Š ƒ • – Š ‡ • ‡ — ” ƒ Ž • ‡ – ™ ‘ ” • • ‘ † ‡ Ž ƒ … … ƒ – ” ™ ‘ ‹ • ‡ • ƒ • † ˆ ‘ – Š . . ‘ ƒ • – ‹ • ‰
‹ • • ‹ • ‹ Ž ƒ ” Š ‡ ‘ • ‘ † ‡ Ž ä . . ‹ ‡ • . . . ‡ ” • • ‘ ˆ • ‘ † ‡ Ž „ — ‹ Ž † ‹ • ‰ • — Š ‡ – ‘ ˆ ƒ • ‘ • ‰ • ‡ — ” ƒ Ž
• ‡ – ™ ‘ ” • • ‘ † ‡ Ž • á ™ ‹ – Š ƒ – Ž ‡ ƒ • – s r r – ‹ • ‡ • „ ‡ – – ‡ ” Ž ‡ ƒ ” • ‹ • ‰ • ’ ‡ ‡ † ™ Š ‡ • • ‡
Š ‡ ” ‡ • — Ž – • ‘ ˆ ’ ‡ ” ˆ ‘ ” • ƒ ‹ . . ‡ ‹ . . ‹ Š ƒ ‹ • ” ‡ • ‡ ƒ ” … Š • Š ‘ ™ – Š ƒ – – Š ‡ ’ ” ‘ ’ ‘ • ‡ † • ‘ •
• ‡ ” ‹ ‡ • • ‘ ’ ‡ ‡ Ž ‘ ” • ™ ‡ Ž Ž ˆ ‘ ” ™ ‹ • † • ’ ‡ ‡ † ˆ ‘ ” ‡ … ƒ • – ‹ • ‰ ä – ‹ • — • ‡ ˆ — Ž ˆ ‹ • ™ ‹ • † ’

[illegible]

Conflict of Interest

[illegible]

Author Contributions

[illegible]

References

[illegible] *WWEA Half-year Report 2022* [illegible]

[illegible] *Bulletin of the American Meteorological Society* [illegible]

[illegible] *et al.* [illegible] *Frontiers in Energy Research* [illegible]

[illegible] *Neurocomputing* [illegible]

[illegible] *Applied Energy* [illegible]

[illegible] *Wind Energy* [illegible]

[illegible] *Proceedings of 2017 International Conference on Intelligent Computing, Instrumentation and Control Technologies (ICICICT)* [illegible]

[illegible] *et al.* [illegible] *Ambient Communications and Computer Systems* [illegible]

[illegible] *Applied Energy* [illegible]

[illegible] *et al.* [illegible] *Mathematical Problems in Engineering* [illegible]

[illegible] *et al.* [illegible] *PLoS ONE* [illegible]

[illegible] *Proceedings of The Asian Conference on Sustainability, Energy and the Environment 2016: Official Conference Proceedings* [illegible]

[illegible] *Time Series Analysis: Forecasting and Control. San Francisco* [illegible]

[illegible]

‡ ” ” ‘ ” *Nature* á u á w u u w u ä
s w ‘ … Š ” ‡ á – ä ‡ ” … Š • ‹ † Š á – ä „ s ‡ { ” { y ä … ƒ • • ‘ Ž ˜ ‡ Š ƒ ” † Ž ‘ • ‰ – ‹ ä ‡ ‘ Ž ƒ ‰ ” á ’ ” ‘ á „ Ž ‡ • •
‘ ” † ƒ • á ä ƒ • † ‡ ä • … Š *Advances in Neural Information Processing Systems* á ƒ • „ ” ‹ † ‰ ‡ á
ƒ • • ƒ … Š — • ‡ – ” ‡ ã • ä
s x ƒ • ‰ ä ä ä s { { u ä ã † ƒ ’ – ‹ ‡ – ™ ‘ ” ƒ • ‡ † ˆ — œ œ › ‹ • ˆ ‡ ” ‘ *IEEE Transactions on*
Systems, Man, and Cybernetics á t w x ã x w x z w ä
s y ‘ Ž á á • ‹ ” Š ‘ — á á t r t s ä • ‘ † ‡ Ž „ ƒ • ‡ † ‘ • ‡ ƒ œ á œ ‰ ” ‹ † ’ ƒ ” – ‹ – ‹ ‘ • ‹ • ‰ ƒ • † • —
… Ž — • – ‡ ” ‹ • ‰ – ‘ † ‡ – ‡ … – ‹ ‘ • ‘ ˆ ‡ • — ƒ • – ‘ ” ƒ ™ Ž • † ‹ ˆ • ‘ ‰ ‹ • ‡ • ” … ‘ *International*
Transactions on Electrical Energy Systems á u s ä
s z Š ‘ ” á ä á ƒ ” á ä á ‡ ‘ • ‰ á *et al.* t r t r ä ‘ • ’ ƒ ” ‹ • ‘ • ‘ ˆ ‡ ˜ ƒ ’ ‘ – ” ƒ • • ’ ‹ ‡ ƒ – Š ‹ † • ‹ • – Š ‡
… ” ‘ ’ ‹ • ‰ • › • ‡ ‡ Ž ã ä Ž ‰ ‘ ” ‹ – Š • *Computers and Electronics in Agriculture* á s y
s r w x y { ä
s { ˜ ‡ ” ƒ á Ž á Ž á ‘ • ‹ † ƒ á á á ‡ Ž ƒ ” „ á ä á ä t r r { ä ƒ • æ „ • ‡ ” ˜ ƒ – æ ‘ • ƒ ” ” æ ‡ ” † ™ ƒ ” † ƒ • † – ‡ • – •
ˆ ‘ ” † ‹ ˆ ˆ ‡ ” ‡ • … ‡ ‹ • • ‡ ƒ • ” ƒ – ‡ • ‘ ˆ … Š ƒ • ‰ ‡ ‹ • … ‘ • – ” ‘ Ž Ž ‡ † ” ‡ ’ ‡ ƒ – ä ‡ † • ‡ ƒ •
Social Science Research á u z á v { t w r u ä
t r ƒ ˆ ƒ ‡ ‹ ’ á — á ” ƒ Š á ƒ á ‹ ‘ • á • ä á *et al.* t r s v ä ’ Ž ‹ … ‹ ƒ • ‘ ˆ • Ž ‹ † ‹ • ‰ ™ ‹ • † ‘ ™ – ‡ … Š •
’ ” ‡ † ‹ … – ‹ ‘ • ‘ ˆ ™ ‹ • † ˜ ‡ Ž ‘ *International Journal of Energy and Environmental Engineering* á
w á s y ä

‘ ’ › ” ‹ ‰ Š – t 9 u „ t › r – Š ‡ ƒ — – Š ‘ ” • ä Š ‹ • ‹ • ƒ • ‘ ’ ‡ • ƒ … … ‡ • • ƒ ” – ‹ … Ž ‡ † ‹ • – ” ‹ „ — – ‡
– – ” ‹ „ — – ‹ ‘ • ‹ … ‡ æ • æ v ä á ™ Š ‹ … Š ’ ‡ ” • ‹ – • — • ‡ á † ‹ • – ” ‹ „ — – ‹ ‘ • ƒ • † ” ‡ ’ ” ‘ † —
’ ” ‘ ˜ ‹ † ‡ † – Š ƒ – – Š ‡ ƒ ” – ‹ … Ž ‡ ‹ • ’ ” ‘ ’ æ Ž • • ‡ ” ‹ … ‡ ƒ Ž ƒ – Š † ‡ • — • ‡ † ‹ ˆ ‹ • ‘ ƒ – ‹ ‘ • • ‘ ” ƒ † ƒ ’
• ƒ † ‡ ä